BLECHA

aluminium is our business
innovation our destination

ANIMAL HUSBANDRY & AVIARY CONSTRUCTION

BLECHA

aluminium is our business
innovation our destination

ALUMINIUM: IDEAL IN SHAPE. ALWAYS.

Our Service

PRODUCTS

- Standard profiles
- Special profiles
- Fence systems
- Pipe fittings and threaded fittings
- Sheets and panels

SURFACE TREATMENT

- Eloxal
- Powder coating
- Special surfaces, such as wood-grain effect

CUTS TO SIZE

- Up to a diameter of 540 mm
- Shortest length 5 mm
- Cutting accuracy up to ±0.2 mm
- Mitre cuts 20° left to 20° right
- Either low-burr or deburred

DELIVERY

- Short delivery times due to our large stock
- Handling of packaging and transport
- Own vehicle park + partner forwarding companies

Blecha: That‘s who we are

A young, dynamic team with 32 years of industry experience as an aluminium wholesaler.

What sets us apart today is our extensive stock, flexibility, speed as well as the reliable processing of our product and customer orders.

Our native speakers speak your language to ensure that orders will be executed smoothly.
Invoices are currently available in 11 different languages.

We guarantee our customers smooth order execution at the highest standard from the inquiry to the final delivery. This is why we already export to more than 60 countries worldwide.

We have a lot of enthusiasm for this material and it keeps growing every day. True to our motto:

ALUMINIUM IS OUR BUSINESS - INNOVATION OUR DESTINATION

LOGISTICS CENTRE AUSTRIA
Area size: 40,000 m2

LOGISTICS HALL HUNGARY
Area size: 21.000 m2

LOGISTICS LOCATION CZECH REPUBLIC
Area size: 13.000 m2

BLECHA
aluminium is our business
innovation our destination

PROFILES FOR AVIARY CONSTRUCTION

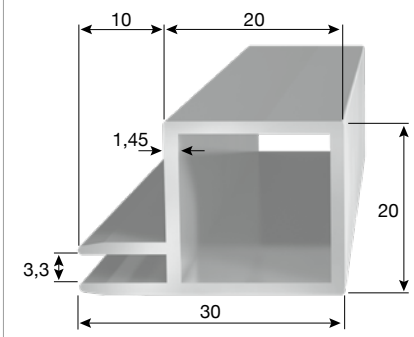

Aviary Profile P210

30 x 20 x 1,5 mm
Length: 6100 mm

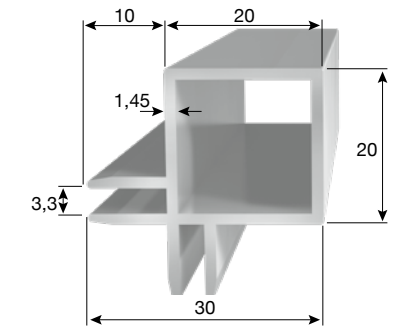

Aviary Profile P212

30 x 30 x 1,5 mm
Length: 6100 mm

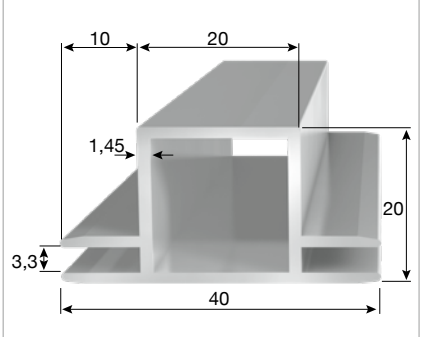

Aviary Profile P211

40 x 20 x 1,5 mm
Length: 6100 mm

WHICH MEASUREMENTS DO YOU NEED?
Flip through our product range

Aviary profiles for easy installation of grid elements

Standard profiles allow flexible aviaries

Cuts of standard and aviary profiles also mitred

Easy-care version (profiles free from grooves)

BLECHA
aluminium is our business
innovation our destination

STANDARD PROFILES FOR STABLES, BOXES AND MORE

» Round tube
» Oval tube
» Rectangular/Square Tubes
» Flat Bars
» Angles
» T-Sections
» H-Sections, Omega Profiles
» U-Profiles
» Z - Sections - C- Profiles
» Round Bars
» Square Bars
» Hexagonal Bars

BLECHA-PLUS:

+ Competent advice
+ Fast order processing
+ Precise cut-outs
+ Fast availability
+ Timely delivery

PLUG-IN CONNECTORS FOR SQUARE TUBES

SUITABLE SQUARE TUBE:

- 20 x 20 x 2 mm
- 30 x 30 x 2 mm

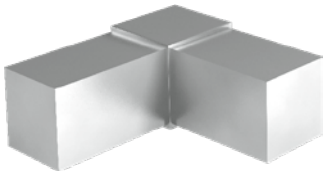

Plug-In Connector RC2
to insert, fits in square tube
20 x 20 x 2 mm and 30 x 30 x 2 mm

Plug-In Connector RC3
to insert, fits in square tube
20 x 20 x 2 mm and 30 x 30 x 2 mm

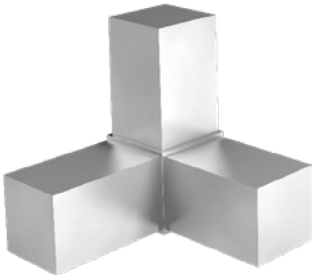

Plug-In Connector RC3A
to insert, fits in square tube
20 x 20 x 2 mm and 30 x 30 x 2 mm

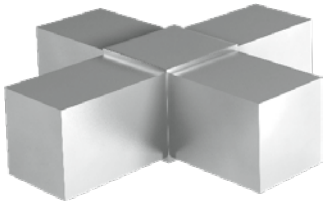

Plug-In Connector RC4
to insert, fits in square tube
20 x 20 x 2 mm and 30 x 30 x 2 mm

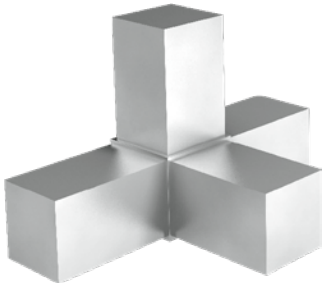

Plug-In Connector RC4A
to insert, fits in square tube
20 x 20 x 2 mm and 30 x 30 x 2 mm

OUR BLECHA-SERVICE

YOUR ADVANTAGES

- Austrian Family-owned business
- Deliveries in over 60 countries all around the world
- 32 years of experience in the industry
- Over 2800 standard and special profiles in stock
- Advice from experts
- Fast order processing
- Deliveries with our own lorries
- Logistics center with storage facilities
- Cutting and sawing works to customer requirements
- Special profiles according to customer requirements

SEE MORE DETAILS AND OTHER SPECIAL PROFILES IN OUR FULL CATALOGUE

WE ARE AT YOUR SERVICE

Ingrid L. Blecha Gesellschaft m.b.H.
Triftweg 102 • 2620 Neunkirchen • AUSTRIA
Tel.: +43 2635 68097 • Fax: +43 2635 68096
E-Mail: office@blecha.at

www.blecha.at • www.aluprofil.at • www.aluzaun.at